Autonics

Modular Multi Channel Power Controller

SPRS Series

PRODUCT MANUAL

For your safety, read and follow the considerations written in the instruction manual, other manuals and Autonics website.
The specifications, dimensions, etc. are subject to change without notice for product improvement. Some models may be discontinued without notice.

Safety Considerations

- Observe all 'Safety Considerations' for safe and proper operation to avoid hazards.
- ⚠ symbol indicates caution due to special circumstances in which hazards may occur.

⚠ Warning Failure to follow instructions may result in serious injury or death.

01. **Fail-safe device must be installed when using the unit with machinery that may cause serious injury or substantial economic loss.(e.g. nuclear power control, medical equipment, ships, vehicles, railways, aircraft, combustion apparatus, safety equipment, crime / disaster prevention devices, etc.)**
    Failure to follow this instruction may result in personal injury, economic loss or fire.
02. **Do not use or store the unit in the place where flammable / explosive / corrosive gas, high humidity, direct sunlight, radiant heat, vibration, impact or salinity may be present.**
    Failure to follow this instruction may result in explosion or fire.
03. **Install the device in panel, and ground to the bolt for grounding separately.**
    Failure to follow this instruction may result in fire or electric shock.
04. **Be sure to install, set, and combine the product with a machanical control system by a qualified user operator.**
    When a non-user operator installs, sets, and combines the product with a mechanical control system, the product does not work as intended, resulting in personal injury, economic loss or fire.
05. **When installing or moving the product and changing the position of the power module, hold the body to move it. Do not hold the input power terminal block or the transparent terminal block protection cover (transparent).**
    Separation of the terminal block or cover from the body may result in product damage or personal injury due to falling.
06. **Do not connect, repair, or inspect the unit while connected to a power source.**
    Failure to follow this instruction may result in fire or electric shock.
07. **Check 'Connections' before wiring.**
    Failure to follow this instruction may result in fire.
08. **Inspect the product daily and regularly every 12 months.**
    Failure to follow this instruction may result in personal injury, economic loss or fire with product malfunction.
09. **Do not disassemble or modify the unit.**
    Failure to follow this instruction may result in fire or electric shock.

⚠ Caution Failure to follow instructions may result in injury or product damage.

01. **Use the unit within the rated specifications.**
    Failure to follow this instruction may result in fire or product damage.
02. **Use a dry cloth to clean the unit, and do not use water or organic solvent.**
    Failure to follow this instruction may result in fire or electric shock.
03. **Keep the product away from metal chip, dust, and wire residue which flow into the unit.**
    Failure to follow this instruction may result in fire or product damage.
04. **Since leakage current still flows right after turning off the power or in the output OFF status, do not touch the load terminal.**
    Failure to follow this instruction may result in electric shock.
05. **Be careful not to injure the edges of the heat sink.**

Cautions during Use

- Follow instructions in 'Cautions during Use'. Otherwise, it may cause unexpected accidents.
- Power supply should be insulated and limited voltage / current or Class 2, SELV power supply device.
- Use the product, after 3 sec of supplying power.
- Before use, set the mode and function according to the specification. Since changing the mode / parameter during operation may result in malfunction, set the mode and function after disconnecting load output.
- Set the operating channel of the control setting mode parameters to match the actual wiring. It may result in malfunction. Refer to the product manual for wiring instructions.
- Re-supply the power to the unit after 3 sec of turning off the power. Failure to follow this instruction may result in malfunction.

- To ensure the reliability of the product, install the product on the panel or metal surface vertically to the ground.
- When installing the power module, use the terminal block protection cover (transparent).
- When installing the front cover of the power module, fit it toward the rear of the product in accordance with installation groove the angle of 30°.
- Do not apply excessive force to open the front cover of the power module, the cover may be detached and fall off.
- Install the unit in the well ventilated place.
- While supplying power to the load or right after turning off the power of the load, do not touch the product body and heat sink. Failure to follow this instruction may result in a burn due to the high temperature.
- Use twisted pair wire for communication line.
- RS485 communication cannot be used at the same time as other communications.
- Since inter element can be damaged when using with coil load, inductive load, etc., the inrush current must be under the rated load current.
- To prevent product malfunction due to noise, wire power, control input, communication, and load cables separately.
- When installing close to the load line, use a line filter for the power line and use a shield wire.
- For stable operation, use shield wire for control, alarm, and communication wires. Use a ferrite core on the shield wire to cope with EMC.
- Do not use near the equipment which generates strong magnetic force or high frequency noise.
- If environments such as ambient temperature or installation specifications are not satisfied, lower the load rate for use.
- The ambient temperature is -10°C to 40°C. Install a cooling system to ensure that the internal panel temperature does not exceed 40°C. If the ambient temperature unavoidably exceeds 40°C, reduce the load current.
- The power modules with different rated currents can be combined and connected. Connect the power modules to the right of the control module in ascending order of current capacity. Failure to follow this instruction may result in malfunction.
- This unit may be used in the following environments.
  - Indoors (in the environment condition rated in 'Specifications')
  - Altitude max. 2,000 m
  - Pollution degree 2
  - Installation category III

Cautions during Installation

High Temperature Caution

While supplying power to the load or right after turning off the power of the load, do not touch the body and heat sink. Failure to follow this instruction may result in a burn due to the high temperature.

When installing multiple the power controller, keep space for heat radiation.

- Width / Length: ≥ 100 mm
- Separation distance between sets: ≥ 80 mm
- Up to 9 sets of connectivity (power distribution control)

- Unit: mm

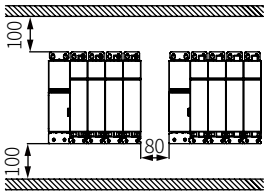

Ordering Information

This is only for reference, the actual product does not support all combinations.
For selecting the specified model, follow the Autonics website.

■ Control Module

SPRS - ❶ - ❷

❶ Module
CM: Control module

❷ Communication
R: RS485
EC: RS485 + EtherCAT
CL: RS485 + CC-Link
PN: RS485 + PROFINET

■ Power Module

SPRS - ❶ - ❷ ❸

❶ Module
No mark: Power module

❷ Rated load voltage
F: Free voltage

❸ Rated load current
Number: Rated load current (unit: A)

Product Components

- Product (+ bracket), Instruction manual
- [Control module] Module connection ribbon cable (2 mm pitch, 24-pin) × 1, Power connector × 1, Control signal / communication connector × 1, Alarm output connector × 1
  [CC-Link comm. model] CC-Link connector × 1
- [Power module] Module connection ribbon cable (2 mm pitch, 24-pin) × 1, FAN power connector × 1, Feedback signal connector× 1, Terminal block protection cover × 2

Software

Download the installation file and the manuals from the Autonics website.

■ DAQMaster

It is the comprehensive device management program for Autonics' products, providing parameter setting, monitoring and data management.

Cautions during Wiring

■ Ferrule terminal

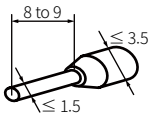

- Unit: mm, Cable specification: AWG 24 - 16
- Applicable connector terminal

Control module	Power connector Control signal / Comm. connector Alarm output connector [CC-Link Comm. model] CC-Link connector
Power module	Feedback signal connector FAN power connector, FAN connector terminal

■ Copper pipe terminal

- Unit: mm, Use copper tube terminal certificated by UL.
- Be sure to use a copper pipe terminal with an insulating sleeves (tubes) that meets a dielectric strength of 600 V or more.

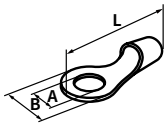

- [Power module] Cable / tightening torque spec. is different depending on the model based on the rated load current. Be sure to check as below.

Rated load current (A)	Copper pipe terminal			Cable (mm^2)	Tightening torque (N m)
	A	B	L		
25 / 40 / 55 / 70	M6	≤ 13	≥ 40	25	5.6 to 6.0
90 / 110 / 150 / 180	M8	≤ 25	≥ 64	95	13.6 to 14.5
200 / 250 / 350	M12	≤ 40	≥ 92	240	47.0 to 50.0
400 / 500 / 600	M12×2	≤ 35	≥ 78	185×2	47.0 to 50.0

Specifications

Series	SPRS Series
Control phases	Single-phase control, single-phase dual control, 3-phase control (wiring and parameter setting)
Rated load voltage	Free voltage 220 - 490 VAC～ 50 / 60 Hz
Permissible voltage range	±10 % of rated load voltage
Load rated frequency	50 / 60 Hz ± 3 Hz (frequency auto identification)
Rated load current	25 / 40 / 55 / 70 / 90 / 110 / 150 / 180 / 200 / 250 / 350 / 400 / 500 / 600 A
Min. load current	1 A
Display method	5 digit 11 segment LCD (white) × 4, Output BAR
Auto control input	Current: DC 4 - 20 mA × 4 ch (input impedance: 100 Ω) Voltage: 0 - 5 / 1 - 5 / 0 - 10 VDC⎓ × 1 ch External adjuster: 10 kΩ Communication: RS485 / EtherCAT / CC-Link / PROFINET
Manual control input	Parameter setting
Digital input (DI)	RUN (short) / STOP (open), MAN (short) / AUTO (open), Alarm reset (short) / Inactivate (open), Not used (4 ch)
Alarm output	8 relay contact output (parameter setting) 250 VAC～ 2 A / 30 VDC⎓ 3 A 1a resistance load
Comm. output	RS485 / EtherCAT / CC-Link / PROFINET model
Cooling method	Natural cooling 01): 25 / 40 A, Forced cooling (with cooling fan): 55 / 70 / 90 / 110 / 150 / 180 / 200 / 250 / 350 / 400 / 500 / 600 A
Certification	CE UKCA cULus LISTED KC
SCCR Rating	100 kA (UL certification)

01) Forced cooling is available by installing FAN separately.

Control method	Phase control	Cycle control
Control mode	Normal / Constant current / Constant voltage / Constant power feedback	Fixed cycle / Variable cycle / Power distribution control
Applied load	Resistance load, inductive load	Resistance load
Output range	2 to 98 %	0 to 100 %
Output accruacy	Varies by control mode	
Normal	Within ± 10 % F.S. of rated load voltage	-
Constant current / voltage / power feedback	Within ± 3 % F.S. of rated load current / voltage / power	-

Control module power supply	24 VDC⎓
Permissible voltage range	90 to 110 % of power voltage
Fan power supply	24 VDC⎓
Power consumption	Control module: ≤ 7 W, power module: each ≤ 2 W (FAN power separately)
Insulation resistance	≥ 200 MΩ (500 VDC⎓ megger)
Dielectric strength	Between the charging part and the case: 3,000 VAC～ 50 / 60 Hz for 1 min
Output leakage current	≤ 10 mArms
Noise immunity	± 500 V square wave noise (pulse width: 1 μs) by the noise simulator
Memory retention	≈ 10 years (when using non-volatile semiconductor memory type)
Vibration	0.5 mm double amplitude at frequency of 5 to 55 Hz in each X, Y, Z direction for 2 hours
Vibration (malfunction)	0.5 mm double amplitude at frequency of 5 to 55 Hz in each X, Y, Z direction for 10 min
Ambient temperature	-10 to 40 °C, storage: -20 to 70 °C (no freezing or condensation)
Ambient humidity	35 to 85 %RH, storage: 35 to 85 %RH (no freezing or condensation)

Module	Control module	Power module			
		25 / 40 / 55 / 70 A	90 / 110 / 150 / 180 A	200 / 250 / 350 A	400 / 500 / 600 A
unit weight (packaged)	0.76 kg (1.26 kg)	2.04 kg (2.62kg)	3.96 kg (4.72kg)	6.10 kg (7.14kg)	13.26 kg (14.82kg)

Derating Curve

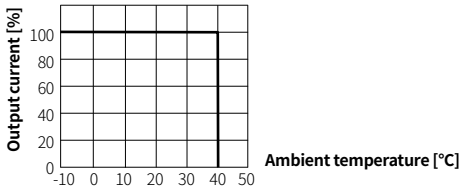

Communication Interface

■ Modbus RTU

Comm. protocol	Modbus RTU (16 bit CRC), Modbus ASCII
Application standard	Compliance with EIA RS485
Max. connection	31-unit (address: 1 to 99)
Comm. synchronous method	Asynchronous
Comm. method	2-wire half duplex
Comm. distance	≤ 800 m
Comm. speed	2,400 / 4,800 / 9,600 (default) / 14,400 / 19,200 / 38,400 / 57,600 / 115,200 bps
Comm. response time	0 to 9999 ms (default: 0 ms)
Start bit	-
Data bit	8 bit (fixed)
Parity bit	None (default), Even, Odd
Stop bit	1 bit (default), 2 bit
EEPROM life cycle	≈ 100,000 operations (Erase / Write)

■ EtherCAT

Comm. specifications	EtherCAT
Association approval 01)	EtherCAT Conformance tested
Connection cable	CAT5e class or over (Shield type: SF/FTP, S/FTP, SF/UTP)
Max. comm. distance	Within 100 m distance between nodes
Max. buad rate	10 / 100 Mbps
Topology	Star, Line, Tree

01) EtherCAT® is registered trademark and patented technology, licensed by Beckhoff Automation GmbH, Germany

■ CC-Link

Comm. specifications	CC-Link Ver.2.0
Association approval	CC-Link
Station type	Remote Device station
Connection cable	CC-Link Exclusive Cable
Baud rate	156 k, 625 k, 2.5 M, 5 M, 10 M bps
Station number	01 to 64
No. of occupied station	1 station occupied, 2 station occupied
Max. Comm. distance	Depending on baud rate

■ PROFINET

Ethernet standard	100BASE-TX
Association approval	PROFINET
Cable speccifications	Cat 5 over STP (Shield Twisted Pair) Ethernet cable
Transmission rate	100 Mbps
Cable length	≤ 100 m
GSDML file	Download the GSDML file from the Autonics website

Module Connection

- Up to 4 power modules can be connected and controlled based on 1 control module. Power modules with different rated load current capacities can be used.
- The control module must be installed on the leftmost side.
- When installing multiple modules, connect the concave (凹) of the lower right bracket / the convex (凸) of the lower left bracket.
- For more information about the control module + power modules connectivity, follow the Autonics website.
- Use the module connection ribbon cable to connect between modules.
  On power modules, connect the above module connector to the left module and the below module connector to the right module.
- After connecting the module connection ribbon cable, it is possible to close the front cover by organizing the cable according to the inner groove.
- An error in the module connection may result in a module connection error alarm.

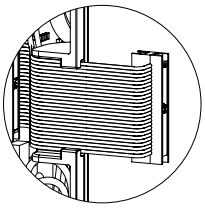

Dimensions

For the detailed drawings, follow the product manual or Autonics website.

Manual

For proper use of the product, refer to the manuals and be sure to follow the safety considerations in the manuals.
Download the manuals from the Autonics website.

Dimensions

- Unit: mm, For the detailed drawings, follow the Autonics website.

■ Control Module

- It is based on the model with RS485 communication(SPRS-CM-R).

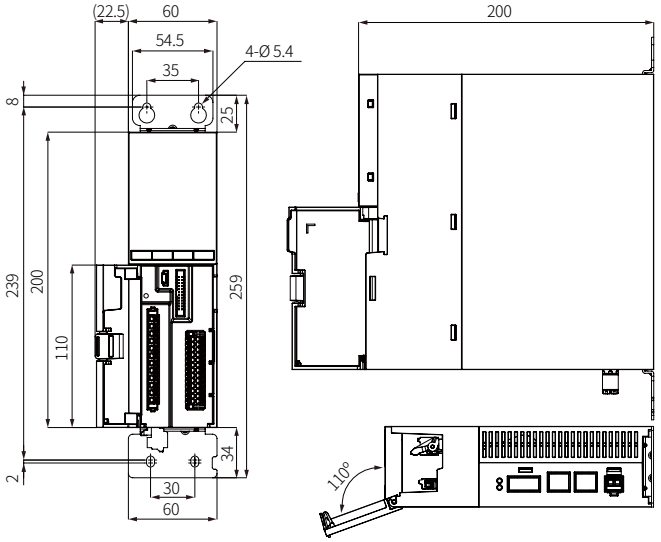

■ Power Module

- **Rated load current 25 / 40 / 55 / 70 A model**

  It is based on a model with rated load current 55 / 70 A. The model with rated load current 25 / 40 A does not have a cooling fan.

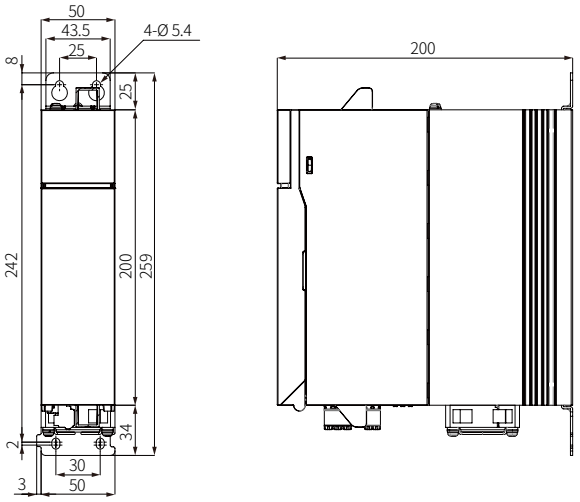

- **Rated load current 90 / 110 / 150 / 180 A model**

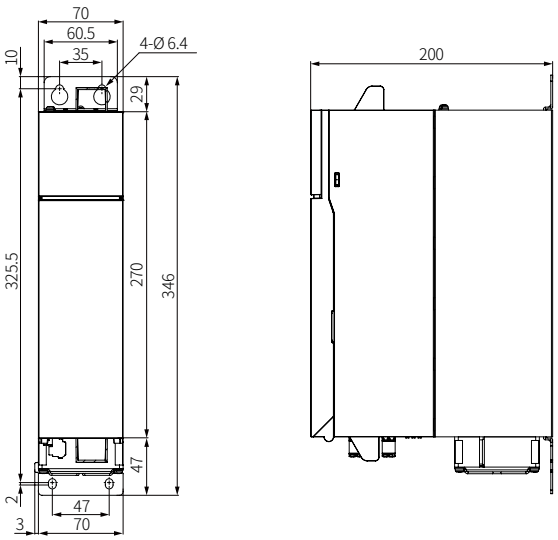

- **Rated load current 200 / 250 / 350 A model**

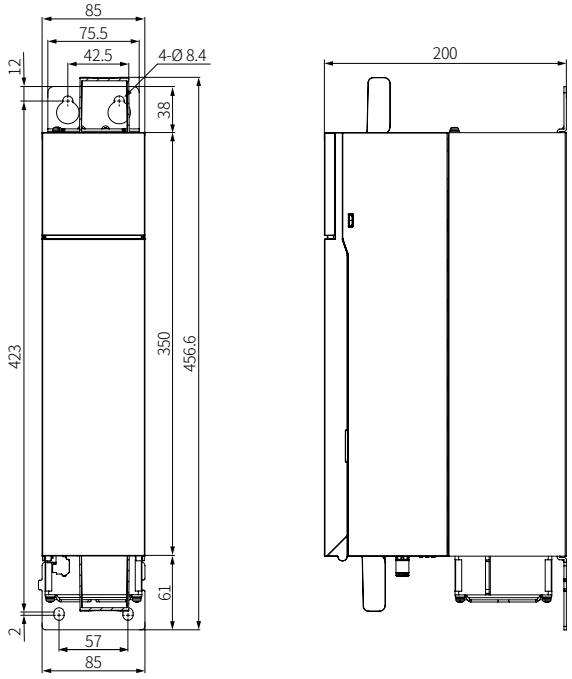

- **Rated load current 400 / 500 / 600 A model**

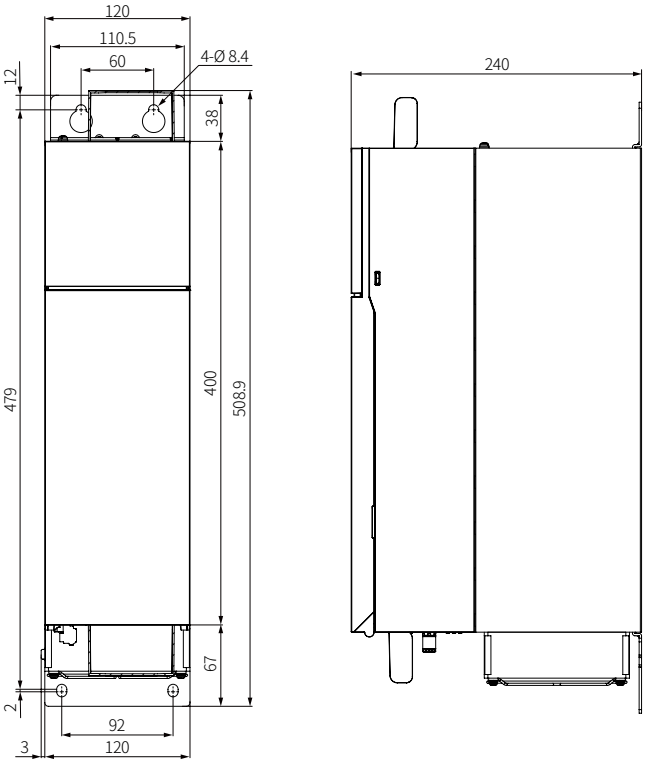

Control Module + 4 Power Modules Connection

- The power modules with different rated currents can be combined and connected.
  Connect the power modules to the right of the control module in ascending order of current capacity.
- The dimensions may vary depending on the module connection.
- Unit: mm

■ Control module + Power module (25 / 40 / 55 / 70 A)

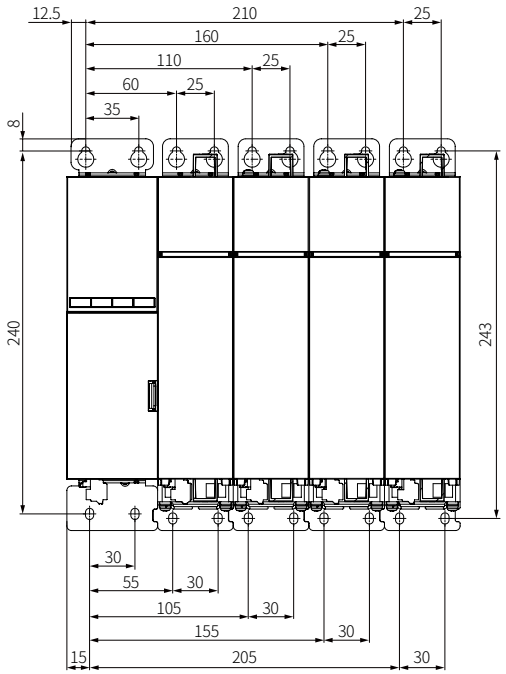

■ Control module + Power module (90 / 110 / 150 / 180 A)

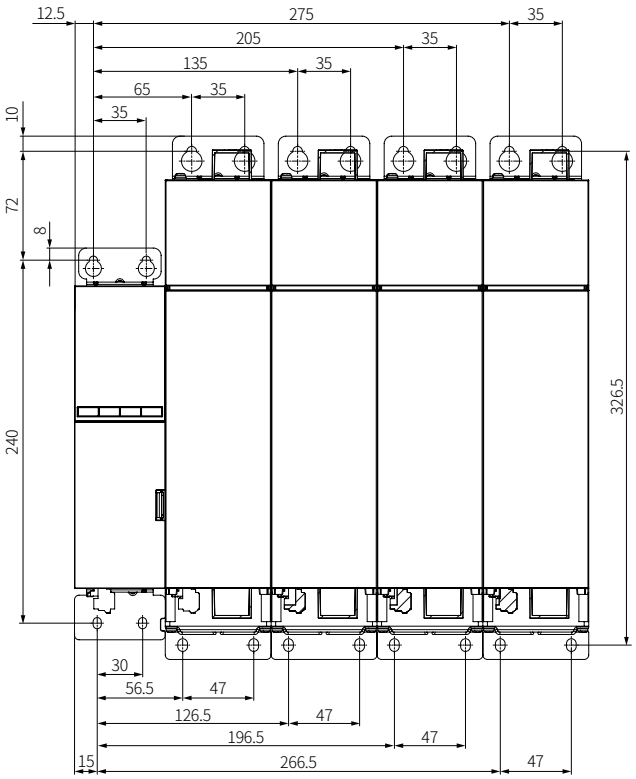

■ Control module + Power module (200 / 250 / 350 A)

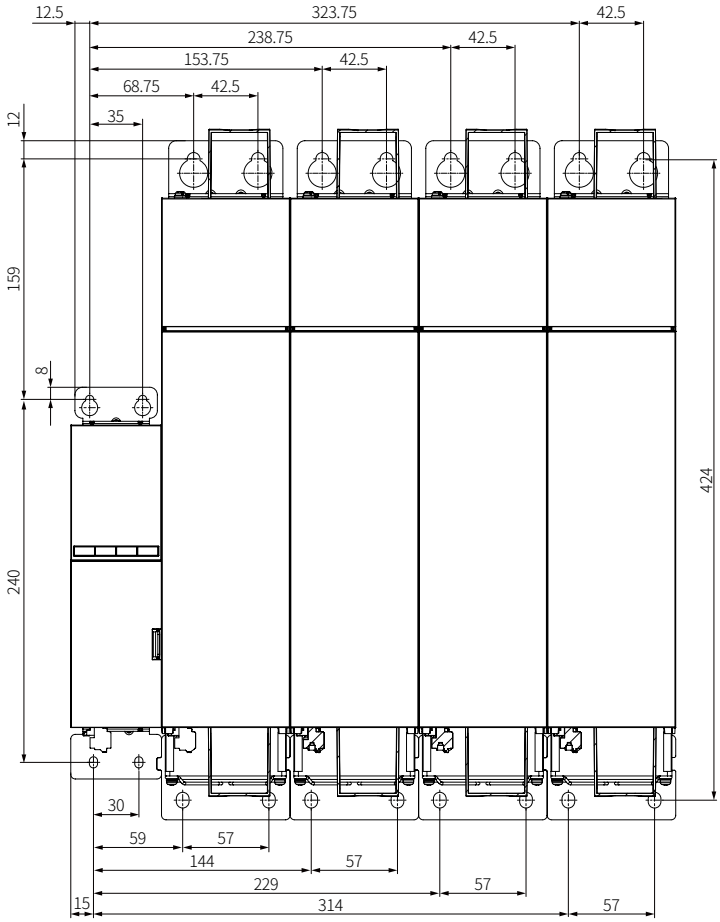

■ **Control module + Power module (400 / 500 / 600 A)**

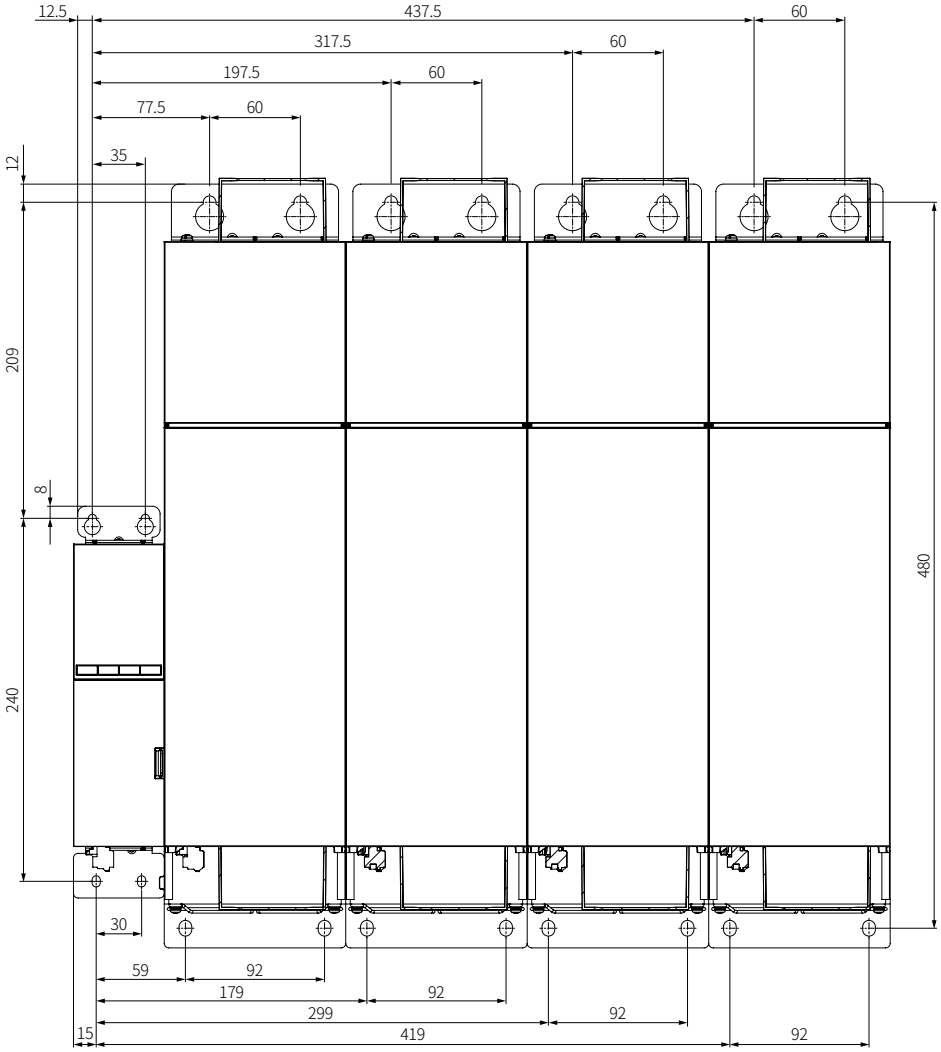

[Control Module] Unit Descriptions

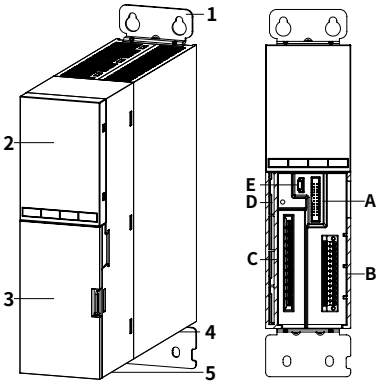

1. Brarcket
2. Display
3. Front cover
A. Module connector
B. Control signal / Comm.connector
C. Alarm output connector
D. Reset button
E. USB connector (do not use)
4. Control power connector
0150-3002, Dinkle

Pin	Function
1	+ 24 VDC
2	- 24 VDC

5. Comm. connector
It depends on the communication support module.

■ Display

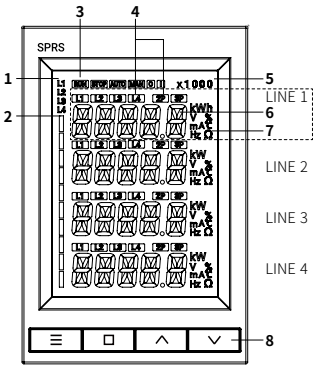

1. BAR output phase (orange)
Turns ON L1, L2, L3 or L4 phase of output BAR display.
2.Output BAR (orange)
Turns ON from the bottom bar. About 10 % of output displays per one bar. (Total of 10 BARs)
3. Control status indicator (green)

RUN	Control	**MAN**	Manual
STOP	Stop	**O**	Output
AUTO	Auto	**I**	Input

4. Control / Monitor phase (green)
Turns ON L1, L2, L3, L4 control phase or monitor phase 2P / 3P in the line.

5. × 1000 indicator (green) (only LINE1)
Turn ON for over 6 digit accumulated power. Multiply 1000 times for the present value.
E.g.) 1,000 kWh, × 1000 means 1,000,000 kWh when turned ON.
6. PV / SV display part (white)
Turns ON the monitoring value. Display range: 0000.0 to 9999.9 (fixed decimal point)
It is possible to set the value for each LINE in the monitoring setting mode.
7. Unit indicator (green)

kWh 01)	kW 02)	V	%	A	mA	°C	Hz	Ω
Accumulated power	Power	Voltage (RMS)	Input / Output	Input / Output current	Control input current	Heatsink temp.	Input power freq.	Load resistance

01) Only LINE1.
02) For LINE2 to 4.

8. Setting keys (≡, □, ▲, ▼)

■ Front cover inner connector

A. Module connector
Connect the module connection ribbon cable to the power module.

C. Alarm connector
0226-0712, Dinkle

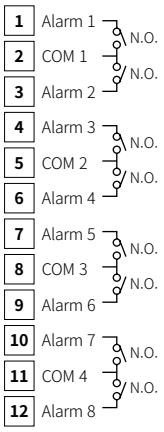

B. Control signal / Comm. connector
0159-0426, Dinkle

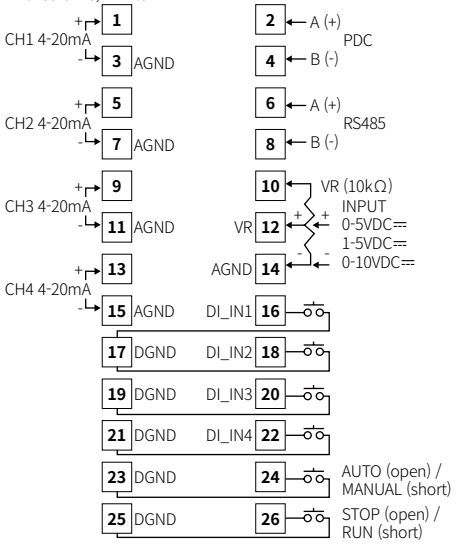

D. RESET button
Reset the operation or alarm.
E. USB connector (do not use)
It is for maintenance of manufacturer. Do not use this connector.

■ Communication Connector

• [EtherCAT comm. model]

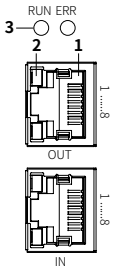

1. EtherCAT comm. connector (OUT/IN)
RJ45

Pin	Function	Pin	Function
1	TD+	5	-
2	TD-	6	RD-
3	RD+	7	-
4	-	8	-

2. RJ45 LED 1 (green)
LED1 Turns ON: Link / activated input
3. ERR (red) / RUN (green) indicator

• [CC-Link comm. model]

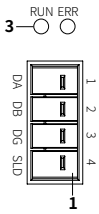

1. CC-Link comm. connector
0150-3004, Dinkle

Pin	Function	Pin	Function
1	DA	2	DB
3	DG	4	SLD

3. ERR (red) / RUN (red) indicator

• [PROFINET comm. model]

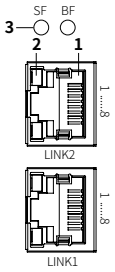

1. PROFINET comm connector (LINK2/LINK1) RJ45

Pin	Function	Pin	Function
1	TD+	5	-
2	TD-	6	RD-
3	RD+	7	-
4	-	8	-

2. RJ45 LED 1 (green) / LED 2 (yellow)
LED1 Turns ON: LINK input
LED2 Turns ON: TX/RX input
3. BF (red) / SF (red) indicator
BF: Bus Fail / SF: System Fail

[Control Module] Digital Input (DI_IN 1 to 4) Setting

Digital input (DI_IN1 to DI_IN4) pins can be connected to external devices (e.g., PLC) to perform set functions based on contact operations. Functions can be configured for each pin of '1-14. digital input'.
The digital input (DI_IN1 to DI_IN4) performed based on the wired channels of the power module connected to the right side of the control module.
Ex) 1P4 wiring: CH1 → DI_IN1 / CH2 → DI_IN2 / CH3 → DI_IN3 / CH4 → DI_IN4
3P1P1 wiring: 3P1(CH1) → DI_IN1 / P1(CH4) → DI_IN4

Function	Display	Contact operation	
		ON	OFF
Not used	DISAL	Not used	
RUN / STOP	R_S	RUN	STOP
AUTO / MAN	A_M	MANUAL	AUTO
Alarm reset	ALM_I	Alarm reset	Inactivate

Load Output Formula

Type	Input		Formula
Auto control (AUTO)	Current	DC 4 - 20 mA	Load output [%] = (Control input [%] × Output slope [%]) + Offset
	Voltage	1 - 5 VDC⎓	
		0 - 5 VDC⎓	
		0 - 10 VDC⎓	
	RS485 / EtherCAT / CC-Link / PROFINET	0 to 100.0 %	
	External adjuster	0 to 10 kΩ	
Manual control (MANU)	Parameter	0 to 100.0 %	Load output [%] = Parameter SV [%]

[Control Module] Initial Display When Power is ON

When power is supplied, after the entire display will turn on for 2 sec. Next, it will flash for 0.5 seconds to indicate the model specification (comm. specification, firmware version). Once this process is complete, the product will enter its RUN mode.

	1. All displays	2. Model spec.	3. Run mode
LINE1	8888.8	ModEL	0.0
LINE2	8888.8	PN (Communication)	0.0
LINE3	8888.8	FW	0.0
LINE4	8888.8	V01 (Firmware version)	0.0

[Control Module] Mode setting

- It is based on Run mode entering / return.

Mode	Entering	Return
Control setting mode	[≡] 2 sec.	[≡] 2 sec.
Alarm setting mode	[≡ +□] 2 sec.	[≡] 2 sec.
Monitoring setting mode	[≡ +▲] 2 sec.	[≡] 2 sec.
BAR output phase setting	[≡]	Auto
Switch to monitor display on LINE1	[□]	Auto
Display current control status in forward direction on LINE1 screen	[▲]	Auto
Display current control status in reverse direction on LINE1 screen	[▼]	Auto
Alarm RESET	[▼] 2 sec.	Auto
EtherCAT status monitoring mode	[≡ + ▼] 2 sec.	[≡] 2 sec.
Manual control input	[□ + ▼] 2 sec.	[≡] 2 sec.
Parameter reset	[▲ + ▼] 2 sec.	[≡] 2 sec.

[Control Module] Alarm

- When an alarm occurs, the following message will flash on LINE 1, and the configured relay (A contact) output will turn ON. If multiple alarms occur, the messages will flash sequentially.
- It is possible to set enabling / disabling the alarm, setting range, delay time, output, and return options with parameter adjustment.

LINE 1 display	Alarm	Output (default)	Alarm release [01]
oC.A	Overcurrent	Stop (SCR OFF)	• Re-supply power. • Press [RESET]. • Press [▼] for over 2 sec. • Set the DI-IN parameter ALM_I and apply a signal of digital input terminal. • Set ENABL = OFF of each alarm parameter.
oV.A	Overvoltage		
otW.A	Heatsink overheat	Maintain (normal operation)	
otP.A	Heatsink overheat protection	Stop (SCR OFF)	
HtbK.A	Heater brake		
dLF.A	partial heater brake	Maintain (normal operation)	
SCR.A	SCR error	Stop (SCR OFF)	
FUSE.A	Fuse brake		
FAN.A	FAN error	Maintain (normal operation)	
FRQY.A	Frezuency error	Stop (SCR OFF)	
LPWR.A	Input low voltage		
PM_A	Module connection error		
UL.A	Load imbalance	Maintain (normal operation)	

01) If the alarm occurrence condition is not removed, the alarm is re-occur even if the alarm release method is applied.

[Control Module] Parameter Setting

- Some parameters are activated / deactivated depending on the model or setting of other parameters.

■ Control setting mode

Parameter	LINE1
Operating channel	oP-S
Control input	INPUt
Load type	LoAd
Control mode	oPER
Feedback control time	Fdb-t
PI coefficient	PI-G
Soft start / up / down	SoF-t
Output high / low-limit	oUt-L
Output current limit	C-LM
Input slope correction	SLoPE
Input offset correction	oFSEt
Partial heater break scan	dLF
Power distribution control	PdC
DIgital input	diSEt
RS485 Comm.	RS485
CC-Link Comm.	CL
Parameter reset	RSt-P
Accumulated power reset	RSt-i
Parameter lock	LoCK
Manual control input	MANU

■ Alarm setting mode

Parameter	LINE1
Overcurrent alarm	oC.A
Overvoltage alarm	oV.A
Heatsink overheat alarm	otW.A
Heatsink overheat protection alarm	otP.A
Heater break alarm	HtbK.A
Partial heater break alarm	dLF.A
Element (SCR) error alarm	SCR.A
Fuse break alarm	FUSE.A
FAN error alarm	FAN.A
Frequency error alarm	FRQY.A
Input low voltage alarm	LPWR.A
Module connection error alarm	PM-CN.A
Load imbalance alarm	UL.A
Alarm log	LoG.A
System time	t-SEt.A

■ Monitoring setting mode

Parameter	LINE1
LINE 1 monitor display	LINE1
LINE 2 monitor display	LINE2
LINE 3 monitor display	LINE3
LINE 4 monitor display	LINE4
Current time	tIM-C
Alarm history	ALM-d
Troubleshooting	diAGN

[Control Module] Parameter Setting_Control Setting Mode

- Some parameters are activated / deactivated depending on the model or setting of other parameters. Refer to the description of each parameter.
- Do not change parameters during output.
- If any key is not entered for 60 sec in each parameter, it returns to RUN mode.
- [≡], [▲], [▼] key: Changes LINE
- [□] key: When LINE1 flashes, saves current set value and moves to the next parameter.
  Changes set values.
  Changes setting digits.
- [▲], [▼] key: Changes number when numerical set value is changed
- **Bold** specifications for each parameter setting range are factory default.

1-0. Entering

In the RUN mode, press the [≡] key for more than 2 seconds to enter.

1-1. Operating channel

LINE1	**OP-S: Operating channel** Set the configuration to match the actual wiring of the power module. Failure to follow this may result in malfunction. Refer to the load wiring for the wiring method.		
LINE2	1P1: Single-phase control + 1 Power module (Load 1-channel) 1P2: Single-phase control + 2 Power modules (Load 2-channel) 1P3: Single-phase control + 3 Power modules (Load 3-channel) **1P4: Single-phase control + 4 Power modules (Load 4-channel)**	2P1: Single-phase dual control + 1 Power 2-module (Load 1-channel) 2P2: Single-phase dual control + 2 Power 2-modules (Load 2-channel) 2P1P1: Single-phase dual control + 1 Power 2-modules + 1 Power module (Load 2-channel) 2P1P2: Single-phase dual control + 1 Power 2-modules + 2 Power modules (Laod 3-channel)	3P1: 3-phase control + 3 Power module (3-phase load 1-channel) 3P1P1: 3-phase control + 3 series controls of power modules + 1 power module (3-phase load 1-chnnel + load 1-channel)
LINE3	-		DELTA: Delta connection STAR: STAR connection
LINE4	-		

1-2. Control input

LINE1	**INPUT: Control input**		
LINE2	Displays the channel set in the 1.1. operating channel OP-S.		
LINE3	**4-20: 4 - 20 mA** Single-phase: 4 channel / 3-phase: 1 channel	1-5: 1 - 5 VDC⎓ 1 channel (Integration) 0-5: 0 - 5 VDC⎓ 1 channel (Integration) 0-10: 0 - 10 VDC⎓ 1 channel (Integration)	EX-R: External volume 10 kΩ RS485: RS485 Comm. F-NET: EtherCAT / CC-Link / PROFINET Comm.
LINE4	**CH1: Channel 1** CH2: Channel 2 CH3: Channel 3 CH4: Channel 4	-	

1-3. Load type

LINE1	**LOAD: Load type**
LINE2	Displays the channel set in the 1.1. operating channel OP-S.
LINE3	**RESIS: Resistive load** TRANS: Inductive load
LINE4	-

1-4. Control mode

LINE1	**OPER: Control mode**				
LINE2	Displays the channel set in the 1.1. operating channel OP-S.				
LINE3	**PA: Normal phase control** F-CY: Fixed cyle control mode V-CY: Variable cycle control mode	FB.C: Constant current phase control (%)	FB.V: Constant voltage phase control (%)	FB.W: Constant power phase control (%)	PDC: Power distribution control
LINE4	-	10 to **100** to 110	10 to **44** to 110	10 to **100** to 110	-

1-5. Feedback control time

LINE1	**FDB-T: Feedback control time** The time to reach the feedback target value can be controlled. (Display condition) 1-4. control mode OPER: FB.C / FB.V / FB.W
LINE2	Displays the channel set in the 1.1. operating channel OP-S.
LINE3	0 to **95** to 100: Slow feedback control time to Fast
LINE4	-

1-6. PI coefficient

LINE1	**PI-G: PI coefficient** Controls the time for the output voltage to reach the steady status and the overshoot.	
LINE2	Displays the channel set in the 1.1. operating channel OP-S.	
LINE3	PGAIN: P coefficient	IGAIN: I coefficient
LINE4	1 to **60** to 300: Slow steady status reach to Fast	1 to **60** to 300

1-7. Soft start / Soft up / Soft down

LINE1	**SOF-T: Soft start /Soft up / Soft down** Sets the time to reach the set value upon initial or re-output.		
LINE2	Displays the channel set in the 1.1. operating channel OP-S.		
LINE3	ST_T: Soft start time The time it takes to reach 100% from the initial 0% output (sec)	UP_T: Soft up time Rise time to reach the target value when the control value is changed during operation (sec)	DN_T: Soft down time Drop time to reach the target value when the control value is changed during operation (sec)
LINE4	0 to **3** to 999: Fast target output value reach to Slow	0 to **3** to 999: Fast target output value reach to Slow	0 to **3** to 999: Fast target output value reach to Slow

1-8. Output high / low-limit

LINE1	**OUT-L: Output high / low-limit** Protects load to limit output range	
LINE2	Displays the channel set in the 1.1. operating channel OP-S.	
LINE3	HIGH: Output high-limit value (%)	LOW: Output low-limit value (%)
LINE4	0 to output high-limit value to **100**	**0** to output low-limit value to 100

1-9. Output current limit

LINE1	**C-LM: Output current limit** Protects load to limit output current
LINE2	Displays the channel set in the 1.1. operating channel OP-S.
LINE3	10 to **110** : Output current limit value (%)
LINE4	Rated current of the power module × 110 % (e.g., SPRS-F600 model, 660 displayed)

1-10. Input slope correction

LINE1	**SLOPE: Input slope correction** Limits the power supplied to the load.
LINE2	Displays the channel set in the 1.1. operating channel OP-S.
LINE3	-99.9 to **0.0** to 99.9: Input slope correction value (%)
LINE4	-

1-11. Input offset correction

LINE1	**OFSET: Input offset correction** It compensates the offset between actual input value and measured input value.
LINE2	Displays the channel set in the 1.1. operating channel OP-S.
LINE3	-99.9 to **0.0** to 99.9: Input offset correction value (%)
LINE4	-

1-12. Partial heater break scan

LINE1	**DLF: Partial heater break** (Display condition) 1-1. operating channel OP-S: 1P1 / 1P2 / 1P3 / 1P4				
LINE2	Displays the channel set in the 1.1. operating channel OP-S.				
LINE3	**START: Partial heater break scan**	LO_C: Number of parallel connections for partial load heaters of the same capacity (units)	LIM-O: Scan range (No alarm for partial heater break in the excess range)	UP-T: Scan UP time	DN-T: Scan DOWN time
LINE4	ON: Start **OFF: Stop**	**2**, 3, 4, 5, 6	25, 50, 75, **100**	0 (OFF), **1** to 100	0 (OFF), **1** to 100

1-13. Power distribution control

LINE1	**PDC: Power distribution control**	
LINE2	Displays the channel set in the 1.1. operating channel OP-S.	
LINE3	ID: Distribution control module ID	T-NUM: Total number of distribution control power modules (units, including Master)
LINE4	1 (Master), **2** to 36	2 to **4** to 36

1-14. Digital input

LINE1	**DISET: Ditial input**			
LINE2	Displays the channel set in the 1.1. operating channel OP-S.			
LINE3	**DISAL**: No use	R_S: RUN / STOP	A_M: AUTO / MANUANL	ALM_I: Alarm reset
LINE4	-			

1-15. RS485 Comm.

LINE1	**RS485: RS485 Comm.**						
LINE2	**PROTO**: Protocol	ADDR: Address code	BPS: Comm. speed (bit)	P-BIT: Parity bit	S-BIT: Stop bit (bit)	RS-T: Response waiting time (msec)	COPY: Writing parameters
LINE3	**RTU**: Modbus RTU ASCII: Modbus ASCII	**1** to 99	24: 2,400 48: 4,800 **96**: 9,600 144: 14,400 192: 19,200 384: 38,400 576: 57,600 1152: 115,200	**NONE**: No use EVEN: Even number ODD: Odd number	**1**, 2	**0** to 9999	**YES**, NO
LINE4	-						

1-16. CC-Link Comm.

LINE1	**CL: CC-Link Comm.** (Display condition) Control module CC-Link Comm. model: SPRS-CM-CL Re-supply power after setting to apply settings.		
LINE2	**ID: Address code**	STN: Subscriber trunk dialing number	BAUD: Communication speed (bps)
LINE3	**1** to 64	1, **2**	**156K**, 625K, 2.5M, 5M, 10M
LINE4	-		

1-17. Parameter reset

LINE1	**RST-P: Parameter reset 1**		
LINE2	**NONE: No use**	START: Start	
		LINE1	RST: Parameter reset 2
		LINE2	NO: Cancel / YES: Start [01]
		01) When 'Yes' is executed, 'INIT' blinks on the display, followed by a reboot, and the parameters are reset to default.	
LINE3	-		
LINE4	-		

1-18. Accumulated power reset

LINE1	**RST-I: Accumulated power reset 1**		
LINE2	**NONE: No use**	START: Start	
		LINE1	RST: Acuumulated power reset 2
		LINE2	NO: Cancel / YES: Start
LINE3	-		
LINE4	-		

1-19. Parameter lock

LINE1	**LOCK: Parameter lock**
LINE2	**OFF: No use** LOCK1: Control setting mode lock LOCK2: Alarm setting mode lock
LINE3	-
LINE4	-

1-20. Manual control input

LINE1	**MANU: Manual control input** The manual control input is activated when the control input signal (terminal 24) is shorted to DGND.
LINE2	Displays the channel set in the 1.1. operating channel OP-S. ALL: All channel
LINE3	**0** to 100: Manual control input value (%)
LINE4	-

[Control Module] Alarm Setting Mode

- Some parameters are activated / deactivated depending on the model or setting of other parameters. Refer to the description of each parameter.
- Do not change parameters during output.
- If any key is not entered for 60 sec in each parameter, it returns to RUN mode.
- [≡], [▲], [▼] key: Changes LINE
- [□] key: When LINE1 flashes, saves current set value and moves to the next parameter.
  Changes set values.
  Changes setting digits.
- [▲], [▼] key: Changes number when numerical set value is changed.
- **Bold** specifications for each parameter setting range are factory default.

2-0. Entering **In the RUN mode, press [≡+□] keys for more than 2 seconds to enter.**

2-1. Overcurrent alarm

LINE1	**OC: Overccurent alarm** It is possible to protect the load, fuse, and element from overcurrent. (Alarm operating condition) An alarm occurs when the set overcurrent is output for longer than the delay time. Overcurrent = rated current × overcurrent upper limit (%)					
LINE2	Displays the channel set in the 1.1. operating channel OP-S.					
LINE3	**ENABL**: Enable	LMT-C: Overcurrent upper limit (%, based on RMS)	DLY-T: Delay time (sec)	OUT-S: Control output during alarm	RLY-O: Relay output	A-RCY: Alarm return (fixed for 5 sec.)
LINE4	**ON** OFF	1 to **110**	3 to **5** to 600	**STOP: Stop** OUT: Hold	DISAL **RL1**/2/3/4/5/6/7/8	ON **OFF**

2-2. Overvoltage alarm

LINE1	**OV: Overvoltage alarm** It is possible to protect the load from overvoltage. (Alarm operating condition) An alarm occurs when the set overvoltage is output for longer than the delay time.					
LINE2	Displays the channel set in the 1.1. operating channel OP-S.					
LINE3	**ENABL**: Enable	LMT-V: Overvoltage upper limit (V, based on RMS)	DLY-T: Delay time (sec)	OUT-S: Control output during alarm	RLY-O: Relay output	A-RCY: Alarm return (fixed for 5 sec.)
LINE4	**ON** OFF	20 to **550**	3 to **5** to 600	**STOP: Stop** OUT: Hold	DISAL **RL1**/2/3/4/5/6/7/8	ON **OFF**

2-3. Heatsink overheat alarm

LINE1	**OTW: Heatsink overheat alarm** (Alarm operating condition) An alarm occurs when the heatsink temperature exceeds the overheat threshold for longer than the delay time.					
LINE2	**ENABL**: Enable	TEMP: Overheat temp. (°C)	DLY-T: Delay time (sec)	OUT-S: Control output during alarm	RLY-O: Relay output	A-RCY: Alarm return (fixed for 5 sec.)
LINE3	ON **OFF**	50 to **60** to 70	3 to **5** to 600	STOP: Stop **OUT: Hold**	DISAL **RL2**/1/3/4/5/6/7/8	**ON** OFF
LINE4	-					

2-4. Heatsink overheat protection alarm

LINE1	**OTP: Heatsink overheat protection alarm** (Alarm operating condition) An alarm occurs when the heatsink temperature exceeds the overheat threshold for longer than the delay time.					
LINE2	**ENABL**: Enable	TEMP: Overheat temp. (°C)	DLY-T: Delay time (sec)	OUT-S: Control output during alarm	RLY-O: Relay output	A-RCY: Alarm return (fixed for 5 sec.)
LINE3	**ON** OFF	70 to **80** to 90	3 to **5** to 600	**STOP: Stop** OUT: Hold	DISAL **RL1**/2/3/4/5/6/7/8	ON **OFF**
LINE4	-					

2-5. Heater break alarm

LINE1	**HT_BK: Heater break alarm** (Alarm operating condition) An alarm occurs when the output exceeds the upper limit and current falls below the lower limit for longer than the delay time.						
LINE2	Displays the channel set in the 1.1. operating channel OP-S.						
LINE3	**ENABL**: Enable	LMT-O: Upper output limit (%)	LMT-C: Lower current limit (A)	DLY-T: Delay time (sec)	OUT-S: Control output during alarm	RLY-O: Relay output	A-RCY: Alarm return (fixed for 5 sec.)
LINE4	**ON** OFF	5 to **50** to 100	**0** to 660	3 to **5** to 600	**STOP: Stop** OUT: Hold	DISAL **RL1**/2/3/4/5/6/7/8	**ON** OFF

2-6.Partial heater break alarm

LINE1	**DLF: Partial heater break alarm** (Alarm operating condition) An alarm occurs if any load becomes disconnected during parallel load operation. (Alarm activation condition) A scan of control settings modes 1 to 12 is required A load quantity × DEAD.Z setting current threshold or higher.					
LINE2	Displays the channel set in the 1.1. operating channel OP-S.					
LINE3	**ENABL**: Enable	DEAD.Z: Non-operating alarm range (A)	DLY-T: Delay time (sec)	OUT-S: Control output during alarm	RLY-O: Relay output	A-RCY: Alarm return (fixed for 5 sec.)
LINE4	**ON** OFF	1 to **3** to 200	3 to **5** to 600	STOP: Stop **OUT: Hold**	DISAL **RL2**/1/3/4/5/6/7/8	**ON** OFF

2-7.Element (SCR) error alarm

LINE1	**SCR: Element (SCR) error alarm** (Alarm operating condition) An alarm occurs when the output is below the set value and the current exceeds the set threshold during the delay time.						
LINE2	Displays the channel set in the 1.1. operating channel OP-S.						
LINE3	**ENABL**: Enable	LMT-O: Lower output limit (%)	LMT-C: Upper current limit (A)	DLY-T: Delay time (sec)	OUT-S: Control output during alarm	RLY-O: Relay output	A-RCY: Alarm return (fixed for 5 sec.)
LINE4	**ON** OFF	**0** to 100	0 to **3** to 660	3 to **5** to 600	**STOP: Stop** OUT: Hold	DISAL **RL1**/2/3/4/5/6/7/8	**ON** OFF

2-8.Fuse break alarm

LINE1	**FUSE: Fuse break alarm** (Alarm operating condition) An alarm occurs if the fuse is broken for longer than the delay time or if the load power is not supplied.				
LINE2	Displays the channel set in the 1.1. operating channel OP-S.				
LINE3	**ENABL**: Enable	DLY-T: Delay time (sec)	OUT-S: Control output during alarm	RLY-O: Relay output	A-RCY: Alarm return (fixed for 5 sec.)
LINE4	**ON** OFF	3 to **5** to 600	**STOP: Stop** OUT: Hold	DISAL **RL1**/2/3/4/5/6/7/8	**ON** OFF

2-9. FAN error alarm

LINE1	**FAN: FAN error alarm** (Alarm operating condition) An alarm occurs if the FAN operating condition (heatsink temp.: ON at 35 °C or higher / OFF at 30 °C or lower) is not met or if the FAN does not operate for longer than the delay time.				
LINE2	Displays the channel set in the 1.1. operating channel OP-S.				
LINE3	**ENABL**: Enable	DLY-T: Delay time (sec)	OUT-S: Control output during alarm	RLY-O: Relay output	A-RCY: Alarm return (fixed for 5 sec.)
LINE4	**ON** OFF	3 to **5** to 600	STOP: Stop **OUT: Hold**	DISAL **RL2**/1/3/4/5/6/7/8	**ON** OFF

2-10. Frequency error alarm

LINE1	**FRQY: Frequency error alarm** (Alarm operating condition) An alarm occurs if the load power frequency is 0 Hz, 44 Hz or lower, or 66 Hz or higher for longer than the delay time.				
LINE2	Displays the channel set in the 1.1. operating channel OP-S.				
LINE3	**ENABL**: Enable	DLY-T: Delay time (sec)	OUT-S: Control output during alarm	RLY-O: Relay output	A-RCY: Alarm return (fixed for 5 sec.)
LINE4	ON **OFF**	3 to **5** to 600	STOP: Stop **OUT: Hold**	DISAL **RL2**/1/3/4/5/6/7/8	**ON** OFF

2-11. Input low voltage alarm

LINE1	**LPWR: Input low voltage alarm** (Alarm operating condition) An alarm occurs when the input voltage falls below the lower input voltage limit for longer than the delay time.					
LINE2	Displays the channel set in the 1.1. operating channel OP-S.					
LINE3	ENABL: Enable	LMT-V: Lower input voltage limit (V)	DLY-T: Delay time (sec)	OUT-S: Control output during alarm	RLY-O: Relay output	A-RCY: Alarm return (fixed for 5 sec.)
LINE4	**ON** OFF	**100** to 500	3 to **5** to 600	STOP: Stop **OUT: Hold**	DISAL **RL1**/2/3/4/5/6/7/8	**ON** OFF

2-12. Module connection error alarm

LINE1	**PM-CN: Module connection error alarm** (Alarm operating condition) An alarm occurs when the communication between the control module and power module is not connected for longer than the delay time. If one power module is connected and operation channel 1P4 (requires 4 power modules) is selected, a module connection error alarm may occur.				
LINE2	Displays the channel set in the 1.1. operating channel OP-S.				
LINE3	**ENABL**: Enable	DLY-T: Delay time (sec)	OUT-S: Control output during alarm	RLY-O: Relay output	A-RCY: Alarm return (fixed for 5 sec.)
LINE4	**ON** OFF	3 to **5** to 600	**STOP: Stop** OUT: Hold	DISAL **RL1**/2/3/4/5/6/7/8	**ON** OFF

2-13. Load imbalance alarm

LINE1	**UL: Load imbalance alarm** (Display condition) 3-phase control (Alarm operating condition) An alarm occurs when the load imbalance ratio is below the lower limit for longer than the delay time. Load imbalance ratio = (Max. 3-phase current - Min. 3-phase current) × 100 / average 3-phase current					
LINE2	Displays the channel set in the 1.1. operating channel OP-S.					
LINE3	**ENABL**: Enable	LMT-P: Lower limit load imbalance ratio (%)	DLY-T: Delay time (sec)	OUT-S: Control output during alarm	RLY-O: Relay output	A-RCY: Alarm return (fixed for 5 sec.)
LINE4	**ON** OFF	5 to **30** to 100	3 to **5** to 600	STOP: Stop **OUT: Hold**	DISAL **RL2**/1/3/4/5/6/7/8	**ON** OFF

2-14. Alarm log

LINE1	**LOG-S: Alarm log**	
LINE2	**ENABL**: Enable	CLEAN: Reset
LINE3	ON **OFF**	**NONE**: Cancel START: Start
LINE4	-	

2-15. System time

LINE1	**T-SET: System time**					
LINE2	**YEAR**: Year	MONTH: Month	DAY: Day	HOUR: Hour	MIN: Minute	SET: Reset
LINE3	2000 to 2100	1 to 12	1 to 31	0 to 23	0 to 59	NONE: Cancel **START**: Start
LINE4	-					

[Control Module] Monitoring Setting Mode

- Some parameters are activated / deactivated depending on the model or setting of other parameters. Refer to the description of each parameter.
- Do not change parameters during output.
- If any key is not entered for 60 sec in each parameter, it returns to RUN mode.
- [≡], [▲], [▼] key: Changes LINE
- [□] key: When LINE1 flashes, saves current set value and moves to the next parameter.
  Changes set values.
  Changes setting digits.
- [▲], [▼] key: Changes number when numerical set value is changed
- **Bold** specifications for each parameter setting range are factory default.

3-0. Entering **In the RUN mode, press [≡+□] keys for more than 2 seconds to enter.**

3-1. LINE 1 monitor display

LINE1	**LINE1**: LINE 1 monitor display		
LINE2	**CTL-O**: Control output value (%) CTL-I: Control input value (%) OUT-V: Output voltage (V) IN-V: Input voltage (V) AMP: Current (A)	WATT: Power (kw) I-WAT: Accumulated power (kwh) OHM: Load resistance (Ω) FRQY: Frequency (Hz) CTL-M: Control method	CONN: Wiring method INPUT: Input channel TEMP: Heatsink temperature (°C) P_FW: Power module FW version PNAME: Power module model name
LINE3	-		
LINE4	-		

3-2. LINE 2 monitor display

LINE1	**LINE2**: LINE 2 monitor display	
LINE2	CTL-O: Control output value (%) CTL-I: Control input value (%) OUT-V: Output voltage (V) IN-V: Input voltage (V) **AMP: Current (A)**	WATT: Power (kw) OHM: Accumulated power (Ω) FRQY: Frequency (Hz) CTL-M: Control method TEMP: Heatsink temperature (°C)
LINE3	**CH1**/2/3/4	
LINE4	-	

3-3. LINE 3 monitor display

LINE1	**LINE3**: LINE 3 monitor display	
LINE2	CTL-O: Control output value (%) CTL-I: Control input value (%) OUT-V: Output voltage (V) IN-V: Input voltage (V) **AMP: Current (A)**	WATT: Power (kw) OHM: Accumulated power (Ω) FRQY: Frequency (Hz) CTL-M: Control method TEMP: Heatsink temperature (°C)
LINE3	**CH2**/1/3/4	
LINE4	-	

3-4. LINE 4 monitor display

LINE1	**LINE4**: LINE 4 monitor display	
LINE2	CTL-O: Control output value (%) CTL-I: Control input value (%) OUT-V: Output voltage (V) IN-V: Input voltage (V) **AMP: Current (A)**	WATT: Power (kw) OHM: Accumulated power (Ω) FRQY: Frequency (Hz) CTL-M: Control method TEMP: Heatsink temperature (°C)
LINE3	**CH3**/1/2/4	
LINE4	-	

3-5. Current time

LINE1	**TIM-C**: Current time				
LINE2	**YEAR**: Year	MONTH: Month	DAY: Day	HOUR: Hour	MIN: Minute
LINE3	Current year	Current month	Current day	Current hour	Current minute
LINE4	-				

3-6. View alarm history

LINE1	**ALM-D**: View alarm history (Alarm history occurence condition) The SPRS device switches from a normal status (no alarms) to an alarm status (at least one alarm active), and all alarms occurring within 1 minute are saved. (No. of alarm history saves) Up to 50 logs can be saved.				
LINE2	LOG 01 to 50 (No alarm history, EMPTY display)				
LINE3	2000 to 2100 (year)	1 to 12 (month)	1 to 31 (day)	0 to 23 (hour)	0 to 59 (minute)
LINE4	OC.A: Overcurrent alarm OV.A: Overvoltage alarm OTW.A: Heatsink overheat alarm OTP.A: Heatsink overheat protection alarm SCR: SCR element error alarm HTBK.A: Heater break alarm		DLF.A: Partial heater break alarm FUSE.A: Fuse break alarm FAN.A: FAN error alarm FRQY.A: Frequency error alarm LPWR.A: Input low voltage alarm PM_A: Module connection error alarm UL.A: Loa imbalance alarm		

3-7. Troubleshooting

LINE1	**DIAGN**: Trouble shooting	
LINE2	Displays the channel set in the 1.1. operating channel OP-S.	
LINE3	CTL-O: Control output value (%) CTL-I: Control input value (%) MIN-O: Output limit MIN setting (%) MAX-O: Output limit MAX setting (%) DLF-C: Partial load scan completion status MPW-S: Power module status ST-T: Soft start setting time	UP-T: Soft start setting time DN-T: Soft start setting time CH1-A: Analog connection status CH2-A: Analog connection status CH3-A: Analog connection status CH4-A: Analog connection status PDC-S: Power dstribution control setting status PM-P: Number of communication completion (per sec.)
LINE4	Check the setting values of the parameters selected in Line3	

[Power Module] Unit Descriptions

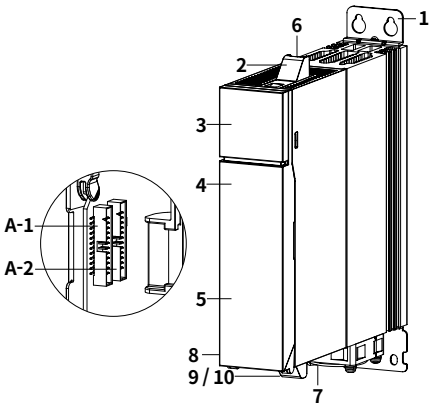

1. Bracket
2. Terminal block protection cover
3. Cover open slide
4. Status indicator
POWER (greem) turns ON
: Power module power supply
ERROR (red) flashes
(0.5 s cycle)
: Alarm occurrence
5. Front cover
A. Module connector
A-1. connect to left module
A-2. connect to right module
6. Input power terminal block

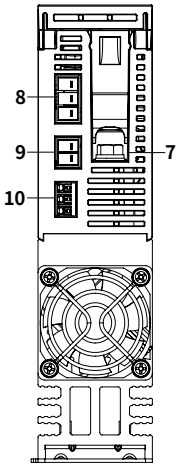

7. Output (heater) terminal block

8. Feedback signal connector

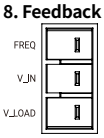

0150-3603, Dinkle

Pin	Function
FREQ	Input power frequency detection
V_IN	Input voltage measuring detection
V_LOAD	Output heater voltage measuring detection

9. FAN power connector

0150-3002 Dinkle

Pin	Function
+	+ 24 VDC
-	- 24 VDC

10. FAN connector

0138-6103 Dinkle

Pin	Function
FAN+	FAN power supply + 24 VDC
FAN_A	FAN operating status signal
FAN-	FAN power supply - 24 VDC

[Power Module] Fuse Replacement

- Push the Slide Cover in the direction of the arrow indicated on the top of the front cover of the power module to open it and check the fuse.
- The performance of the product is guaranteed only when using the fuse provided by us. For replacing the fuse, use the recommended fuse.

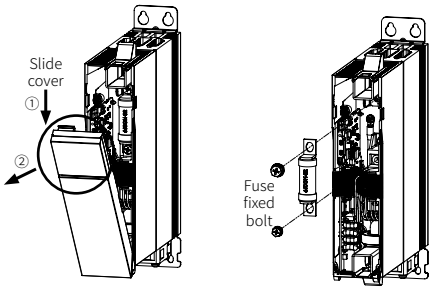

■ Fuse recommended specifications

- Rated short circuit test is evaluated as a recommended fuse.

Model	Rated load current	Recommended fuse	Manufacturer	Fuse fixed bolt
SPRS-F25	25 A	50FE	BUSSMANN	M5 × 12, M6 × 16
SPRS-F40	40 A	50FE	BUSSMANN	
SPRS-F55	55 A	80ET	BUSSMANN	
SPRS-F70	70 A	100FE	BUSSMANN	
SPRS-F90	90 A	170M1368	BUSSMANN	M6 × 12, M8 × 20
SPRS-F110	110 A	170M1369	BUSSMANN	
SPRS-F150	150 A	170M1370	BUSSMANN	
SPRS-F180	180 A	170M1372	BUSSMANN	
SPRS-F200	200 A	170M2620	BUSSMANN	M6 × 16, M10 × 25
SPRS-F250	250 A	170M2620	BUSSMANN	
SPRS-F350	350 A	170M3471	BUSSMANN	
SPRS-F400	400 A	170M4018	BUSSMANN	M10 × 25, M10 × 50
SPRS-F500	500 A	170M4018	BUSSMANN	
SPRS-F600	600 A	170M4018	BUSSMANN	

[Power Module] Load Wiring

- Set the operating channel of the control setting mode parameters to match the actual wiring. Failure to do so may result in malfunction.
- R: Load input power
  U: Heater (load) connection
- Connecting a capacitor (CAP) across the input phase-to-neutral (A-N, B-N, C-N) or input line-to-line voltage (A-B, B-C, C-A) will ensure compliance with EMC standards.
  - FILM CAPACITOR: ≥ 1μF / 500 VAC~

- Feedback connector

Pin No	Pin	Function
1	FREQ	Input power frequency detection
2	V_IN	Input voltage measuring detection
3	V_LOAD	Output heater voltage measuring detection

■ Single-phase: 1P1

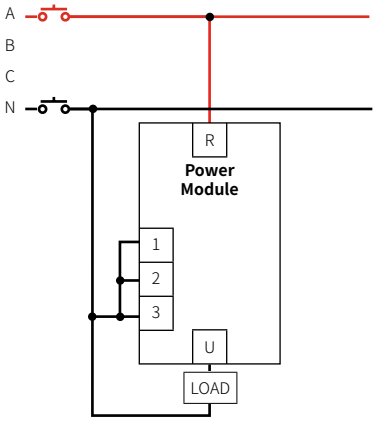

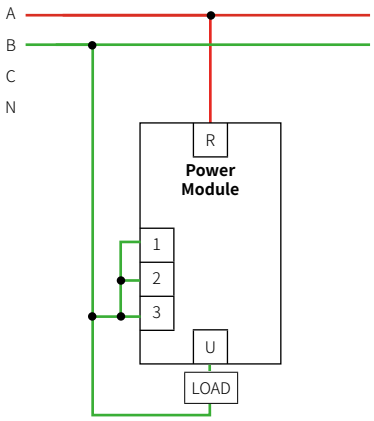

■ Single-phase: 1P2

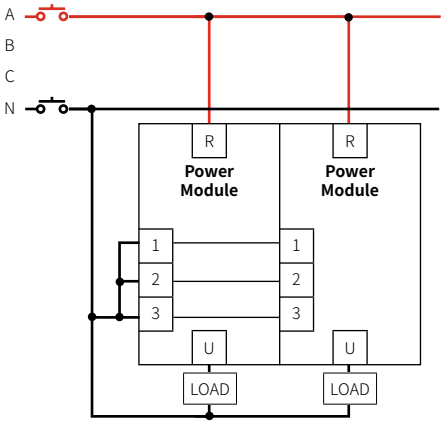

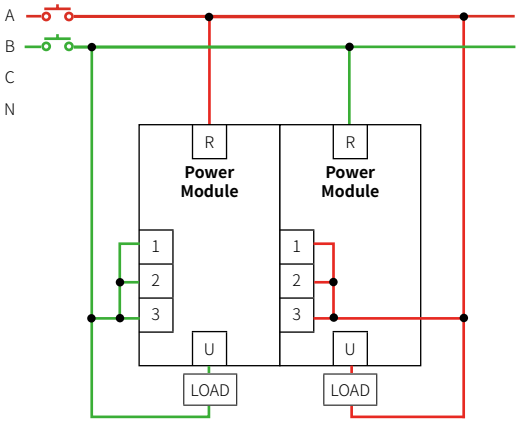

■ Single-phase: 1P3

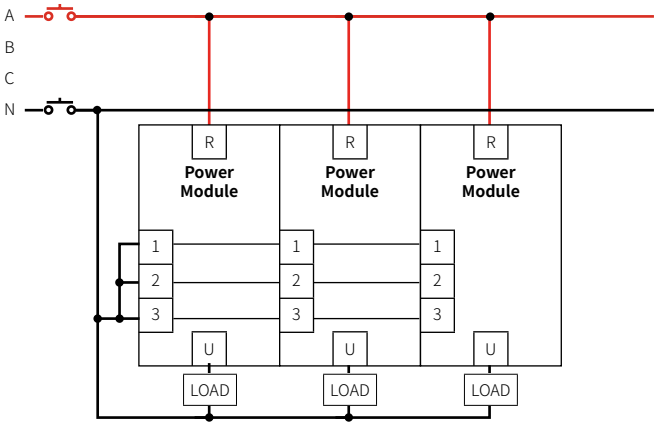

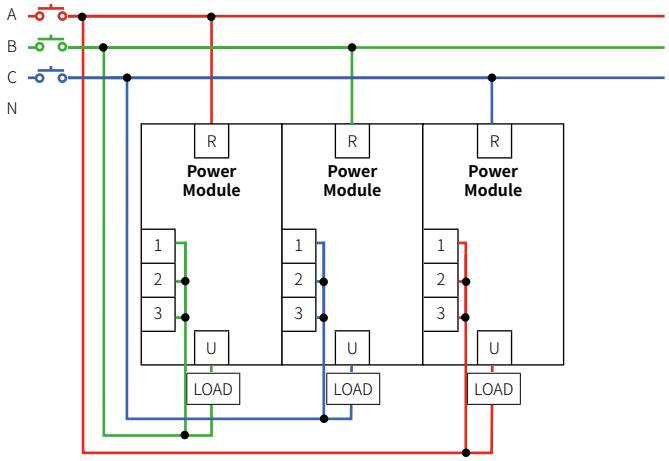

■ Single-phase: 1P4

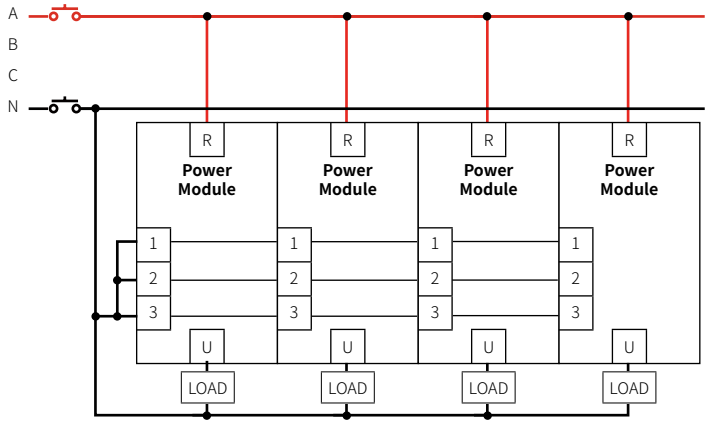

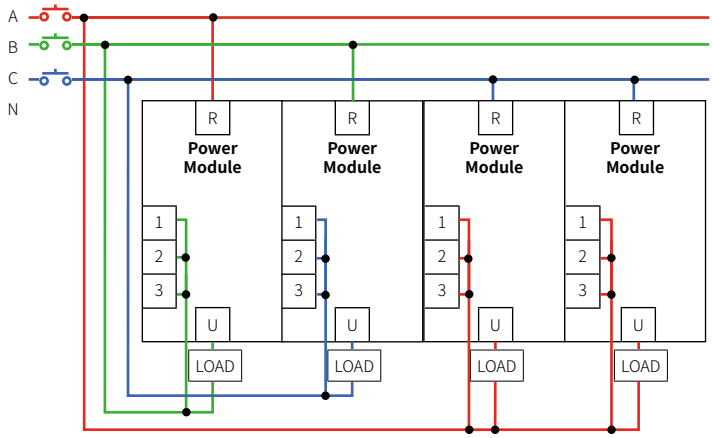

Single-phase dual: 2P1

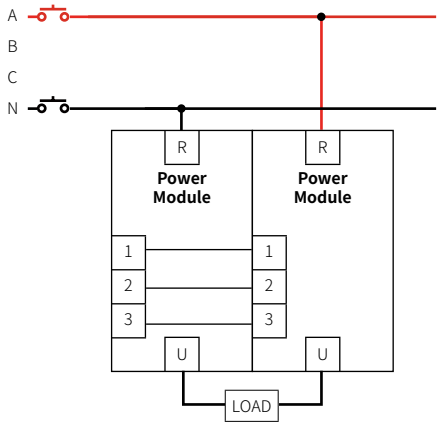

Single-phase dual: 2P2

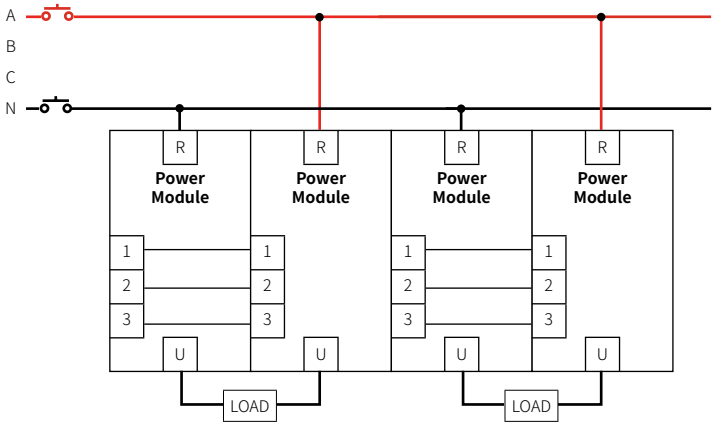

Single-phase dual: 2P1P1

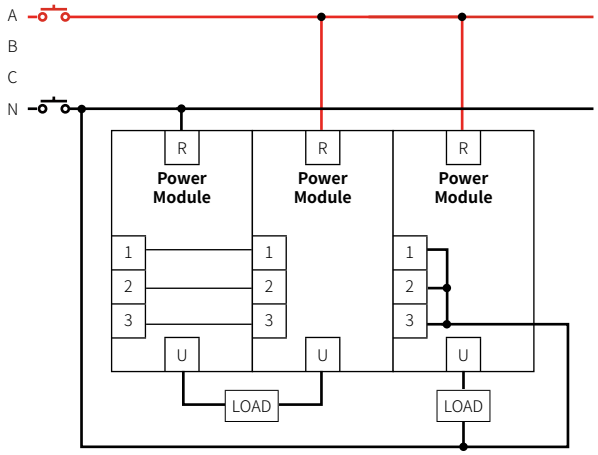

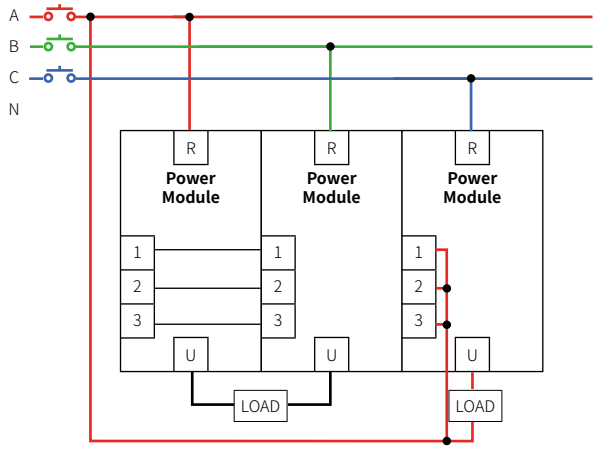

Single-phase dual: 2P1P2

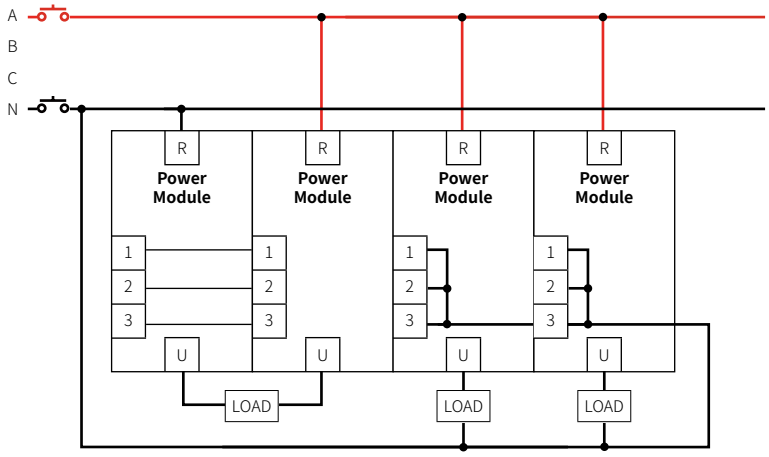

■ 3-phase: 3P1

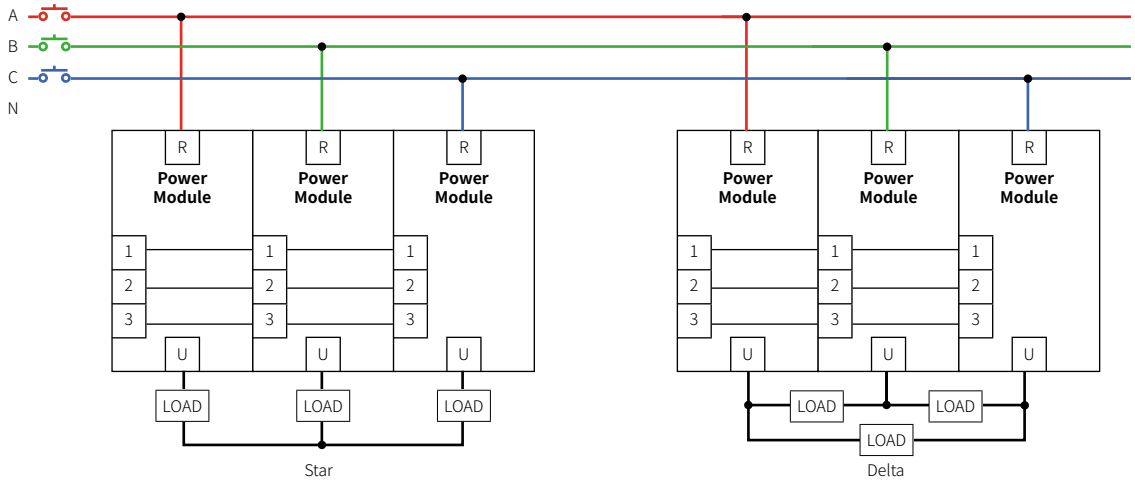

■ 3-phase: 3P1P1

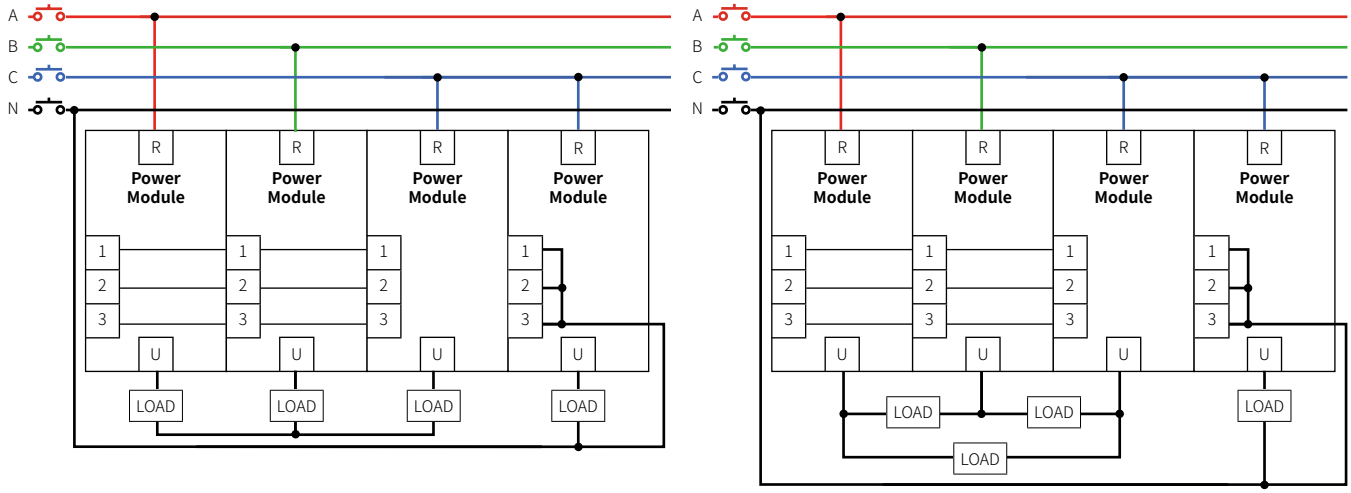

Control Method

■ Phase control

Phase control method is to control output by dividing AC phase by control input signal.

- **Normal = Phase equal division method by control input**

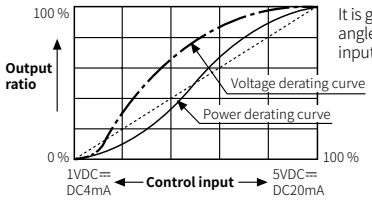

It is general output method to divide control angle proportionally according to control input signal and to output it.

- **Constant current feedback control mode**

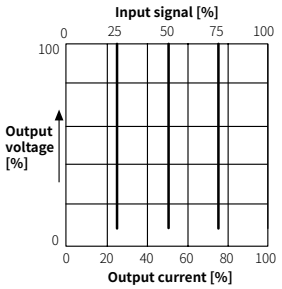

It outputs a constant current proportional to the control input so that the output current does not fluctuate against fluctuations in power voltage and load resistance fluctuations of loads (platinum, molybdenum, tungsten, etc.) in which the temperature coefficient of electrical resistance varies significantly from 6 to 12 times the normal temperature.

- **Constant voltage feedback control mode**

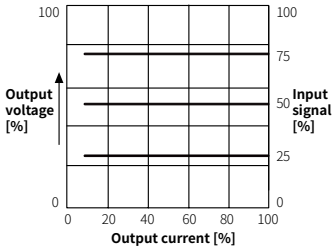

It outputs a constant voltage proportional to the control input so that the output voltage does not fluctuate against fluctuations in power voltage and load resistance fluctuations of loads (iron, chromium, nichrome, etc.) with a small electrical resistance temperature coefficient.

- **Constant power feedback control mode**

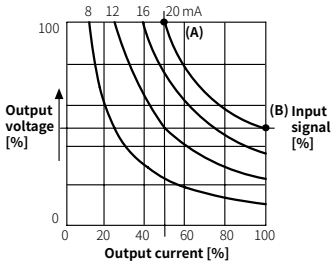

It is proper control method for a heater which resistance value variation by silicon carbide (SiC) heating is big.
It outputs constant power which is proportion to control input even though load variation and power supply variation.

- (A): [output voltage 100 % × output current 50 %]
  (B): [output voltage 50 % × output current 100 %]
- Output characteristics is proper 50 % of the curve which connects the point (A) and the point (B). The current output capacity of this unit should be over two times of load capacity.

■ Cycle control, zero cross turn-on

Compared to the phase control method, the load control linearity is better.
Since it is always ON or OFF at the zero point of AC, no noise is generated during ON / OFF, so it is a suitable control method for an environment where noise is not affected or an electric furnace with a large heat capacity.

- **Fixed cycle control mode**

During fixed cycle (100 cycles) of load power, it repeats ON / OFF cycle as constant ratio according to control input signal and controls the power supplies on the load.

When controlled by 40 % of the control output signal

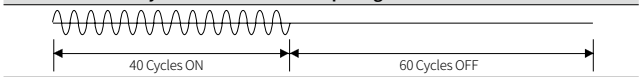

When controlled by 90 % of the control output signal

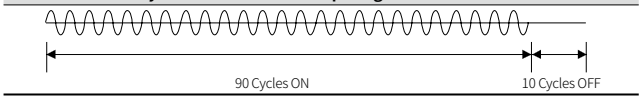

- **Variable cycle control mode**

By minimizing the number of cycles of the load power, it controls the power applied to the load (heater) by operating ON / OFF at a ratio proportional to the control input signal.

When controlled by 25% of the control output signal

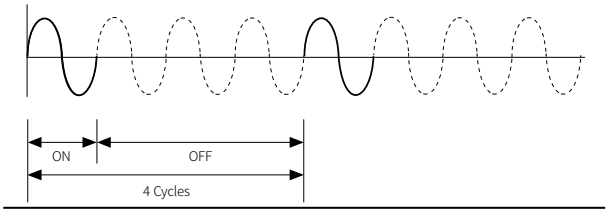

■ Power distribution control

- When operating up to 36 single-phase power modules, the system controls to prevent instantaneous peak power from concentrating at the same time through internal algorithm calculations between modules.
- Separate wiring work is required between control modules.
  Connect the A(+) and B(-) terminals of the PDC in the control signal / communication connector of control module to the A(+) and B(-) terminals of the other control modules.

- **Control module connection**

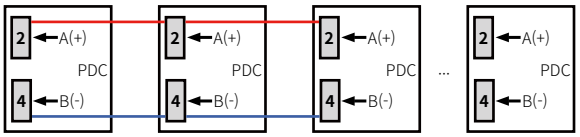

- **Power distribution control**

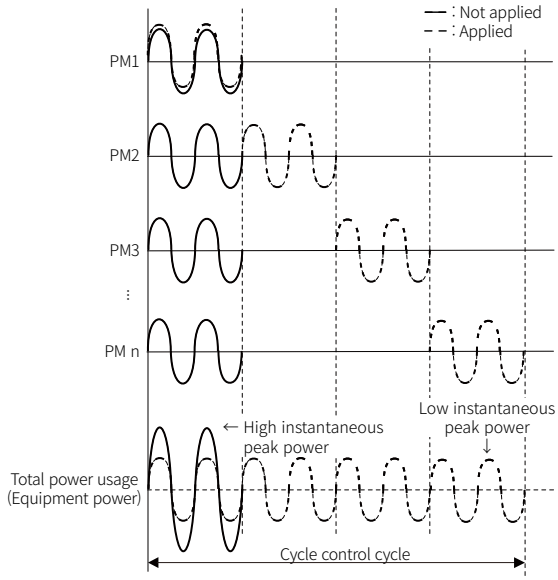

Function

■ PI Coeffient

The PI controller is a control method that combines the proportional and integral coefficients to compensate for the error with respect to the target value. It is set to the optimal values from the factory settings. If the proportional and integral coefficients are arbitrarily set too small, it can lead to a fast response but may cause overshoot or hunting. If set too large, the response speed will be slower.

■ SOFT START

This function protects the load in cases that the set temperature is high, such as controlling the load (platinum. molybdenum, tungsten, infrared lamp, etc.) in which inrush current flows when power is supplied, or showing large width of temperature rise during initial operation.
If the input is changed before the end of the SOFT START function, T increases or decreases by the changed difference (%).

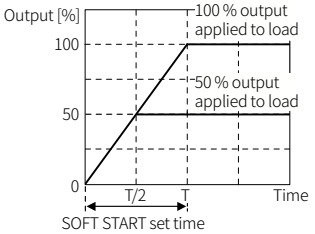

- T: SOFT START set time.
  Time to get the output which is applied into the load is 100 %.
- T/2: Time to get the output which is applied into the load is 50 %.

■ SOFT UP / DOWN

Unlike SOFT START which operates only once at supplying power, this function protects load from the inrush current in the RUN mode. When reached to the target output value, operation stops.

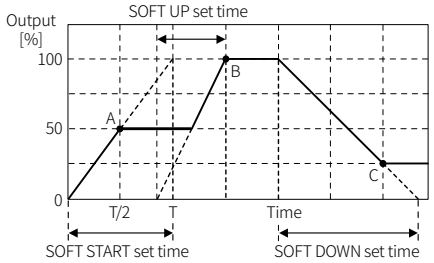

- A: SOFT START function finished
- B: SOFT UP function finished
- C: SOFT DOWN function finished

■ Output high / low-limit value

This function is to limit output range to protect load.

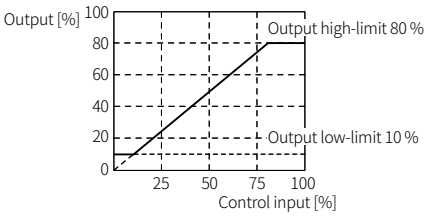

■ Input slope correction

It prevents load damage by limiting 100% of the power supplied to the load. It compensates the gain of the measured 100 % input for actual 100 % input value.
Calibrated monitoring value =
Monitoring value +

$$\frac{\text{Monitoring value}}{\text{100 - input slope correction value}} \times \text{Input slope correction value}$$

- E.g.) When the input monitoring value is 99 % at 20 mA in DC 4 - 20 mA control input, setting LINE3 of 1-9 Input slope correction = 1 % calibrates the input monitoring value to 100 %.

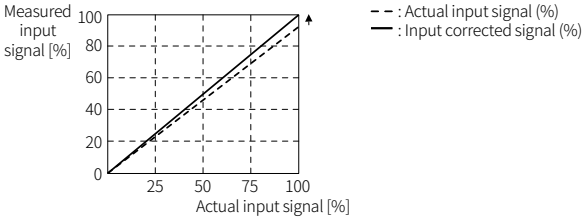

■ Input OFFSET correction

It compensates the offset between actual input value and measured input value.

- E.g.) When input monitoring value is 5 % at 4 mA in DC4 - 20 mA control input, setting LINE3 of 1-10 Input offset = -5.0 % calibrates the input monitoring value to 0 %.

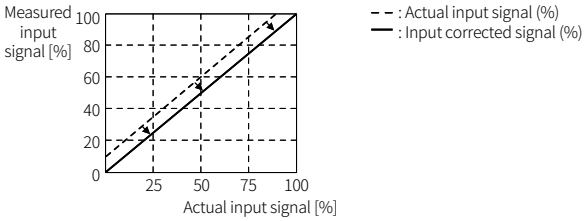

■ Partial heater break

The partial heater break alarm is available for single-phase control. When the alarm occurs, DLF.A flashes on the display (LINE1) at 0.5-second intervals, while the output is maintained.

• Operating conditions

The alarm occurs when a load (heater) is disconnected (break) during single-phase 1-channel parallel load operation.
A load quantity × DEAD.Z setting current threshold or higher.
Ex) If there are 5 loads and the DEAD.Z setting is 5A,
Alarm occurence condition = 5 loads × DEAD.Z setting 5 A = 25 A
25 A or higher: Alarm occurs in the power module SCAN value
25 A or lower: No alarm

Segment Table

The segments displayed on the product indicate the following meanings. It may differ depending on the product.

7 segment				11 segment				12 segment				16 segment			
0	0	I	I	0	0	I	I	0	0	I	I	0	0	I	I
1	1	J	J	1	1	J	J	1	1	J	J	1	1	J	J
2	2	K	K	2	2	K	K	2	2	K	K	2	2	K	K
3	3	L	L	3	3	L	L	3	3	L	L	3	3	L	L
4	4	M	M	4	4	M	M	4	4	M	M	4	4	M	M
5	5	n	N	5	5	N	N	5	5	N	N	5	5	N	N
6	6	o	O	6	6	o	O	6	6	o	O	6	6	O	O
7	7	P	P	7	7	P	P	7	7	P	P	7	7	P	P
8	8	q	Q	8	8	Q	Q	8	8	Q	Q	8	8	Q	Q
9	9	r	R	9	9	R	R	9	9	R	R	9	9	R	R
A	A	S	S	A	A	S	S	A	A	S	S	A	A	S	S
b	B	t	T	b	B	t	T	b	B	t	T	b	B	T	T
C	C	U	U	C	C	U	U	C	C	U	U	C	C	U	U
d	D	u	V	d	D	V	V	d	D	V	V	d	D	V	V
E	E	y	W	E	E	W	W	E	E	W	W	E	E	W	W
F	F	h	X	F	F	x	X	F	F	x	X	F	F	x	X
G	G	y	Y	G	G	y	Y	G	G	y	Y	G	G	y	Y
H	H	Z	Z	H	H	Z	Z	H	H	Z	Z	H	H	Z	Z